User information

“SILENTIO” system control

Fill level measuring device and drinking water supply

Article – No.: 351022

Otto Graf GmbH ***Carl- Zeiss- Str. 2-6*** ***Tel.: +49 7641 5890***

Kunststofferzeugnisse ***D 79 331 Teningen*** ***Fax: +49 7641 58950***

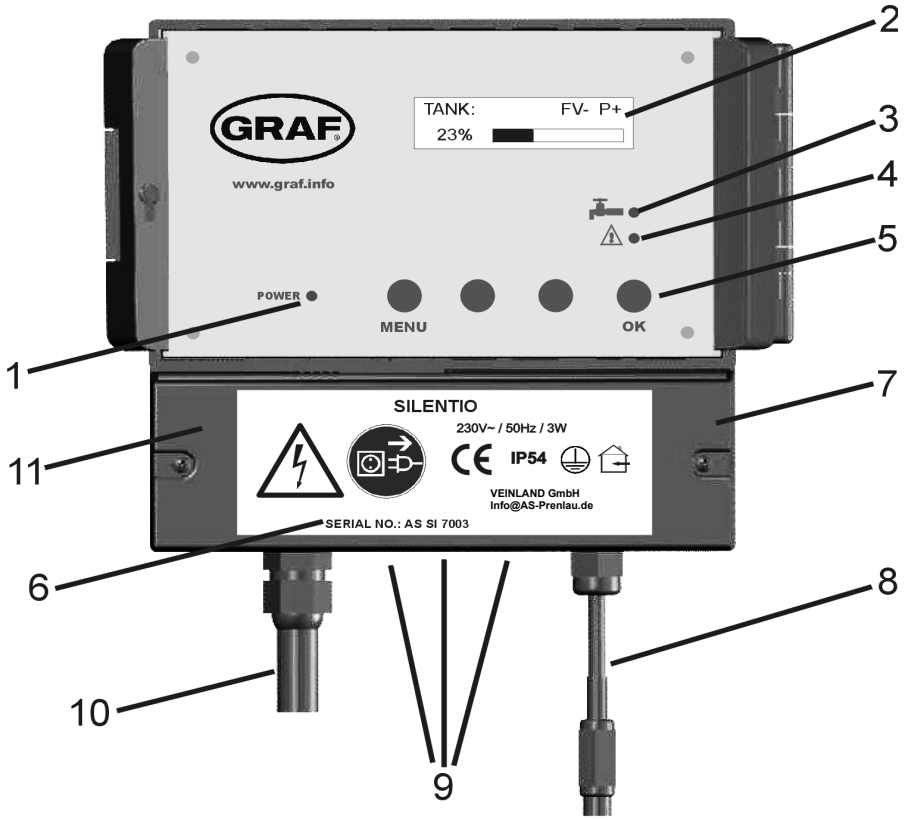

1: LED for power supply display
2: Display
3: LED for drinking water operation
4: LED for faults and malfunction
5: Operating buttons
6: Serial number
7: Lower cover of the System Control
8: Coupling for data lead
9: Pre-stamped breakthrough for upgrading features
10: Mains power coupling
11: The mains circuit breaker of the system controls are under this cover.

Picture 1: View of equipment

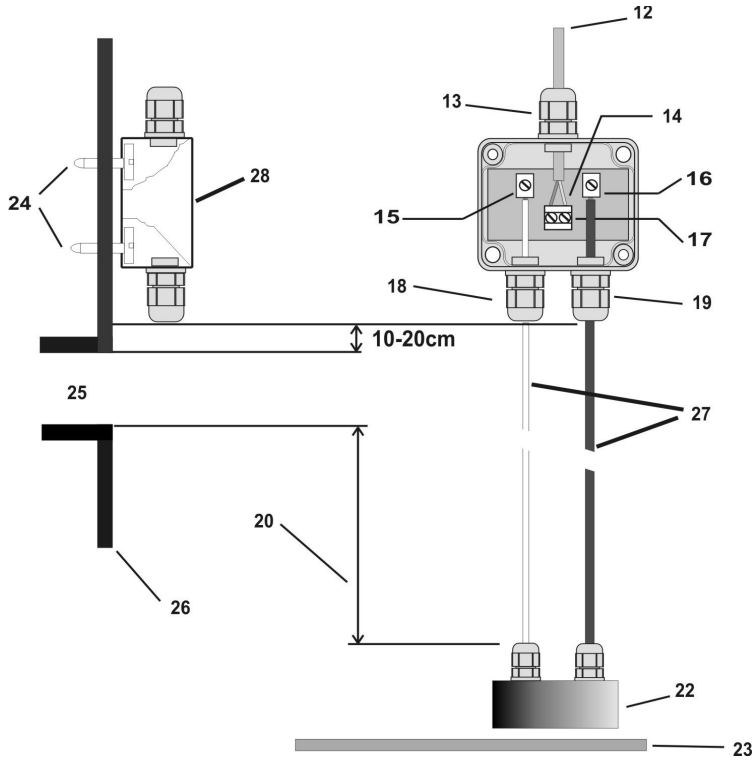

12: Data cable

13: screw cap 3

14: Connection of the data cable is reverse protected.

15: connect white cable here

16: connect red cable here

17: data cable terminal

18: screw cap 2

19: screw cap 1

20: active measuring length

22: Stainless steel probe

23: Tank floor

24: Screws must be blunted ! (danger of injury)

25: overflow

26: Tank side in dome

27: Sensor

28: Sensor control box (measurement pick-up)

Picture 2: Sensor assembly

1. Safety Insructions

Please read carefully the safety and instruction manual before using this device! Follow all instructions that are in the User Guide (Manual) to achieve the optimal performance. Please keep these safety and operating instructions safe for further use.

General Safety Instructions / Symbol Explanation

- refers to an information

- means warning and indicates a special situation

- indicates a hazardous situation which may cause to heavy or serious injury or even death

1.1 Personnel

The installation, commissioning and dismantling of the device must be done only by trained and authorized personnel. During installation, it is necessary to pay attention to the safety regulations defined by the user and local laws and rules.

1.2 Proper Use of the Device

The equipment is designed exclusively for the intended purpose specified in the manual. Any other use and / or misuse of the device can lead to unpredictable risks including death and causes the loss of all the claims against the manufacturer.

1.3 Limitation of the Liability

The manufacturer would not take over any liability for damages resulting from:

- the usage of the device by untrained and unauthorized personnel,
- use of device for not intended purpose
- opening and/or manipulation of the device
- not following the manual and safety instructions

1.4 Electric Current

!!Danger of life from electric current!!

Direct contact to the parts of the device will cause an electric shock. In case of damage to the insulation, the device must be switched off immediately and the damaged area must be de-energized.
While maintaining on the device, ensure that the power supply is off at all times and make sure the device is de-energized.

1.5 Electrical Shock

If objects (e.g. hairpins, needles or coins) or liquids fall into the device, it can cause life threatening electrical short-circuits, which can lead to fire. The user has to make sure that above mentioned objects, especially made of metal and/ or liquid things, will not fall in to the device intentionally or unintentionally.

1.6 Safety Operations

The operation and use of the device is to be done by instructed and authorized personnel only.

1.7 Power Supply

The equipment exclusively operates with the operating voltage indicated in the manual.

1.8 Cable Connection

When installing the cable connections, the user needs to pay attention to the safety regulations. Always pay attention to the connection to the protective earth ground! Pay attention when connecting with other devices, that those have to be of the same earth potential (same heavy current/voltage side).

1.9 Ventilation

The equipment must be installed in so that good ventilation to the device is ensured. Do not put any covering objects on the device, such as newspapers, books or towels.

1.10 Water and Moisture

The device is not allowed to operate in close vicinity of electrical conductive liquids or moist areas. It is not allowed to place any liquid things on the device or in the nearby area of the device.

Attention: Danger of Electric Shocks!

1.11 Temperature and Heat

The operating temperature of the device is defined in the specifications. The device must not be placed near things which produce heat such as to blowers, heaters, furnaces or other devices.

1.12 Opening the Device

Disconnect the mains plug before opening the device!
There is a risk of electrical shock when touching the parts inside the device. It is not permitted to make any changes in the device.

1.13 Cleaning

Do not use any volatile solvents such as alcohol, diluents, gasoline etc. to clean the device. Only use a dry, clean cloth.

1.14 Unusual Smell

If any unusual smoke or smell occurs, immediately switch off of the device and remove it from the main power supply! Contact your dealer or the manufacturer.

1.15 Fuses

The replacement of the fuses in the device is only permitted by trained and authorized technical staff.
The change of the fuses is only allowed when the device is switched off and is removed from the main power supply. Otherwise there is a risk of electric shocks. The security functions and safety values are mentioned in the manual. The guarantee for this equipment will expire in case of using other fuses than those specified in the manual.

1.16 Repairing

The user is not allowed to perform the maintenance work by himself, except for those specified in the manual. All maintenance and repair work must be done by trained and authorized technical personnel.

1.17 Important notes of safety

Please, read and follow safety instructions carefully before assembly or using the device!

The mounting position must be suitable for a safe and secure routing and connecting of the cables. The cables may not be damaged or squeezed by some other inappropriate objects. Plan the mounting position so that the optional plug in power supply unit can be reached and removed easily from the socket should the situation dictate!

Please ensure that unattended children may not play with the equipment or cables.

We accept no responsibility for damage caused through not following this user information or through improper handling of the equipment.

2. Description and intended use

The "**SILENTIO"** is an electronic water management control system. It has been developed especially for rain water usage systems. The device is intended for use in a domestic environment. It can be used with a wide variety of tank systems. Tanks made from metal or steel reinforced cement may only be used when the following conditions have been correctly followed. Metal tanks lead to faulty readings. Helpful is to assemble the device so that the sensor is as far as possible from the metal sides so for example, in the centre of a cylindrical tank.

⚠ **The operation of the system control is to be checked at regular intervals (at the latest every 4 weeks).**

3. Description

The system controls offer an easy to use guide for the switch programming. Using an LCD display the fill measurement is shown in 1 % stages (in relation to the height of the tank).The sensor operates with a 12 volt supply. All programmed values such as the tank height are retained after disconnection of the power supply or after a power-cut.

Performance features:

- Fill level measurement readout in 1% steps and with an additional bar type indicator
- In 1% steps freely variable choice of the switching points for the drinking water refill
- Automatic flushing of the system (choice of intervals in day and time are possible)
- Dialogue oriented user guidance (choice of language)
- Equipment indication using 3 additional LED
- Supervision of the measurement pick-up and the sensor
- Error indications in plain text

Technical data:

Control electronics		**Measurement sensors**	
Operating voltage	: 230V AC	Measurement voltage	: 12V DC
Fused	: 50mA slow-blow	Measuring frequency	: (0,2-20)kHz
Power consumption	: 3VA	Data cable length	: 20m *(max. 50m)*
Tank height	: 3m *(optional 6m)*		
Measurements [mm]	: 155x165x90	Measurements [mm]	: 90x80x50

Additional pumps connection		**Filter cleaning valve connection**	
Operating voltage	: 230V AC	Operating voltage	: 230V AC
Pump capacity	: max. 850VA	Output current	: max. 1A

*Only the control electronics in the device are protected by the fuse. Valves and pump connections are **not** protected. These are protected only by the mains supply via the mains fuse.*

The yellow LED indicating “Drinking water operation” is lit as soon as the valve switches over to the mains supply. The user is made aware that the system now uses water from the mains supply. The red LED for “Faults and malfunctions” is lit as soon as the system identifies a fault. The display will then show a warning that describes the cause of the fault in plain text.

4. Assembly

4.1 Control system

The electric mains supply plug acts also as the ON/OFF switch.

Before opening the equipment pull the plug out from the mains socket!

The system control is integrated as standard in the basic „SILENTIO“ device from the company Graf. Caution: Always remove the plug from the mains socket before opening the lower cover **[7]** of the system control housing!

4.2 Connection sensors and data cable

The sensor electronics comprise of a stainless steel probe **[22]** with a red and a white connecting cable **[27]** and the sensor measurement pick-up **[28]**.

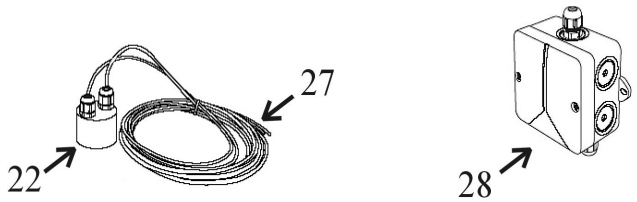

Picture 3: Sensor technology

1. Now the sensor measurement pick-up **[28]** (cover removed) should be installed on the tank wall (preferably in the man hole shaft of the Graf synthetic tank). The location of the mounted sensor pick-up should be between 10 and 15 cm above the overflow **[25]**. The enclosed screws should be used to secure the device. After fully tightening the screws, the points that are showing themselves on the outside of the tank must be blunted to avoid injury **[24]**.

2. Measure the height from the bottom of the tank **[23]** to the end of the terminals **[15]** and **[16]** on the measurement pick-up **[28]**.

3. Shorten the connection cable to suit the measured height.

4. Connect the sensor cable to the sensor as described in the following instructions: Remove between 5-7 mm of the insulation from both of the cables. Next, pass the red cable through the screw mounting 1 **[19]** and tighten this lightly, then connect the red cable to the terminal **[16**]. The free white cable is now passed through the screw mounting 2 **[18]** and tightened lightly, then connect the white cable to the terminal **[15]**.

5. Now pass the end of the data cable that has no plug connector **[12]** through the screw mounting 3 **[13]**. Lightly tighten the screw mounting and connect the cable wire cores of the data cable **[12]** to the double terminal **[14]**. The connection of the data cable is reverse polarity protected. **Attention! The screws should be tightened with care to ensure that they are not damaged through over tightening.**

6. Now recheck that all the screwed items and the sensor components have been fitted correctly. Replace the cover of the measurement pick-up and secure this with the appropriate fastening screws.

7. The installation of the data cable **[12]** to the system control must be according to good professional practice to constitute a correct completion of the sensor technology: A protective cable conduit must be used. (The data cable is not suitable for installing directly in the earth).
The end of the data cable that is still unconnected is fitted with a plug connector. This is to be plugged into the appropriate socket **[8]** of the system control. Diagram 2 on page 3 makes clear the interrelation.

The red and the white cable going down to the probe should be straight and smooth to be drawn taught by the weight of the stainless steel probe. The stainless steel probe must hang just above the tank floor.

4.3 Electrical connection of the filter flushing valve

Before opening the equipment pull the plug out from the mains socket!

The connection of the valve for cleaning the rainwater filter is optional. If running the system without the rainwater filter please read on from point 5 (Putting into operation).

Before connecting the Rainwater usage system, please ensure there is no over straining or tension on any of the connections. The plug of the system control unit must not be connected to the socket of the electrical supply. Pass the end of the cable from the solenoid valve for the rainwater cleaning filter through the threaded grommet holder provided with the housing of the SILENTIO system control. Now open the lower housing cover **[7]** of the system control (see Figure 1). The openings for the threaded grommet holders are pre-stamped to ease breaking out. Break out the opening for the threaded grommet holder with an appropriate tool such as a small screw driver. Fit the supplied threaded grommet holder into the opening and secure with the locking nut from the inside. Isolate the wire cores of the cable in the proper manner. Pass the cable through the grommet opening in the system control unit housing. Connect the protective earthing conductor (green - yellow wire core) to a free terminal with the designation **"PE / Ground"**. Connect the neutral wire core (blue) to a free terminal with the designation **"5"**. Connect the live electrical supply wire core (brown or black) to a free terminal with the designation **"3"** (power supply to the filter flushing valve). The following figure depicts the connections described above:

1: Pump

2: Power supply to additional pump

3: Power supply to filter flushing valve

4: Power supply to switch-over valve

5: Neutral conductor

P: 230V AC

PE/Ground: Earth

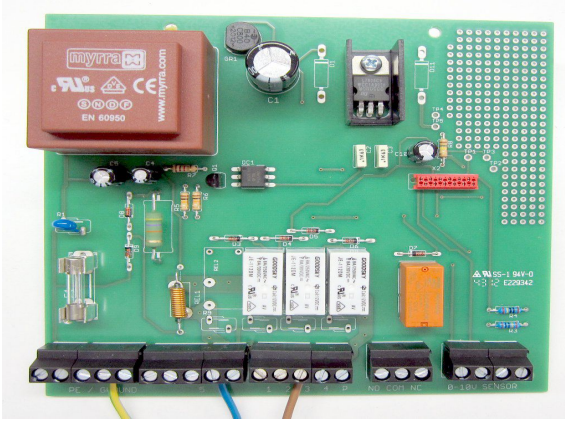

Picture 4: Electrical diagram for filter flushing valve

After connecting the wires, close the lower cover **[7]** of the system control housing.

4.4 Electrical connection of the additional pump

Connection of the additional pump is optional. If running the system without the additional pump please read from point 5 (putting into operation). The activation of the connection for the additional pump take place at the same time as the house water system. At pressure build-up through the house water system (pump running) is the additional pump connection switched on.

Before opening the equipment pull the plug out from the mains socket!

The plug of the system control unit must not be connected to the socket of the electrical supply. An earth cable is absolutely necessary for connection of the additional pump. We advise that this cable should be protected by a pipe running from the holding tank to the rainwater usage system. Pass the end of the cable through the threaded grommet holder provided with the housing to the SILENTIO system control. Now open the lower cover of the system control housing (see Figure 1). Remove the blind screw and replace this with the supplied threaded grommet holder. Isolate the wire cores of the cable in the proper manner. Pass the cable through the grommet opening in the system control unit housing. Connect the protective earthing conductor (green - yellow wire core) on a free terminal with the designation **“PE / Ground”**. Connect the neutral wire core (blue) on a free termin-

al with the designation **“5”**. Connect the live electrical supply wire core (brown or black) on a free terminal with the designation **“2”** (power supply to the additional pump). The following figure depicts the connections described above:

1: Pump

2: Power supply to additional pump (for SILENTIO Press)

3: Power supply to filter flushing valve

4: Power supply to switch-over valve

5: Neutral conductor

P: 230V AC

PE/Ground: Earth

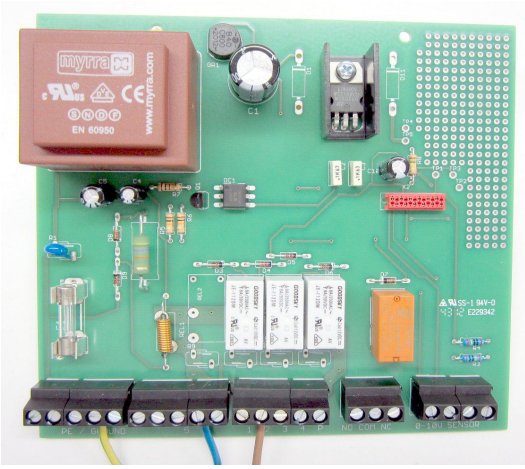

Picture 5: Connection diagram for additional pump

After connecting the wires, close the lower cover **[7]** of the system control housing.

5. Putting into operation

Before putting into operation, please be absolutely sure that all the live wires and electrical terminals are correctly insulated and that the protective covers are in position throughout the system. Now open the transparent cover of the system control. Now plug in the system to the appropriately fused socket for the system. The system will now independently run through a systems check. For the duration of the systems check (approximately 10 seconds) the display will read as follows.

SILENTIO
REV x.x

Picture 6: Display for the duration of the systems check

Instead of “xx” the software position will be shown.

In the first line the system type will be shown and in the second line the software position will be shown. After the correct initialisation of the system installation has been acknowledged the LCD display will show the fill level as a percent (%).

The first running of the unit will show the fill level reference point that is according to the standard factory setting tank height Standard factory setting values:

Tank height to overflow	: 200cm (+/- 1cm)
Drinking water switching point	: ON at 10% / OFF at 12%
Flushing the drinking water system	: after 14 days for 30 seconds
Cleaning the rainwater filter	: after 14 days for 5 seconds with rainwater
Language	: German

Figure 7 shows the LCD display in operation mode. Except for the fill level and the switch positions “FV” and “P” the display should correspond with the intended default.

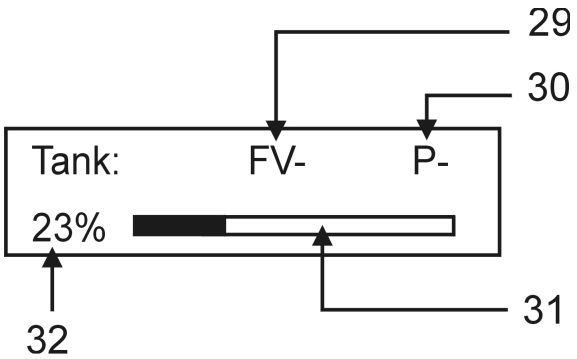

29: Status of valve for rain water filter

30: Status of house water system (Pump)

31: Visual representation of fill level

32: Fill level %

FV+ : Filter valve open

FV- : Filter valve closed

P+ : House water pump running

P- : No water being with drawn

Picture 7: Display in operation

6. Set up of the system control

After putting into operation, the system control must be adjusted and programmed according to the conditions and requirements of the individual users system. The required settings are easily programmed. There are four buttons for this purpose. All necessary programming data entries follow a menu displayed by the LCD. For the set up follow all the points listed in table 1 in the sequence as shown. Should any error in the sequence occur then it is necessary to begin the set up again from the beginning starting with the tank height. Begin the programming of the settings by pressing the button marked “MENU”.
With the buttons “▲“ or “▼“ the menu may be scrolled backwards and forwards.
With the respective menu point shown the values may be altered. For this the button “OK” must be used. The “?” displayed in the LCD will now change to a “>”graphic character.
With the “▲“ or “▼“ the desired value may now be entered according to individual requirements. When the desired value has been entered this must be confirmed by pressing the “OK” button. The value is only then taken over and stored in the programming of the unit.
Through pressing the “MENU” button again the display changes back to the operation mode. It is possible to reset the unit to the factory setting standard values at any time. The resetting can only be carried out in the operation mode (Display see Figure 7).
To do this press the “OK” button and hold it pressed. Now simultaneously in addition press the “MENU” button. After a short wait the following display will be shown:

```
DEFAULT VALUES
 23%
```

Picture 8: Message reset to standard factory settings

As soon as this message is displayed the buttons may be released.

The menu structure integrated in the system control is introduced to familiarise the user in diagram 9. To bring up the menu, press and hold the „MENU“ button for longer than 5 seconds. All outlets are inactive when the menu level has been activated. The operation of the device is suspended. The system control switches automatically back to the operating mode when no entries have been received for approximately 30 seconds.

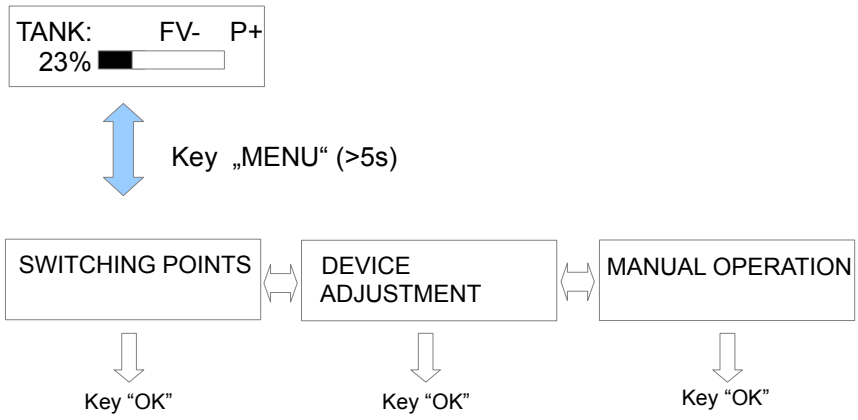

Picture 9: Main menu level

Press the “OK” button to arrive at each of the listed sub-menu functions. Through pressing the “MENU” button again the display changes back to the operation mode.

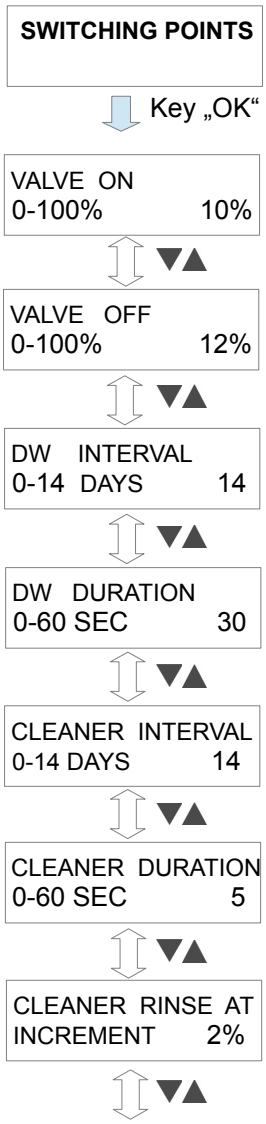

Main menu level

Supply with mains drinking water – ON *(The numerical value is always smaller than with valve OFF)*
Act on the port switch-over valve.

Supply with mains drinking water – OFF
Act on the port switch-over valve.

Flush the drinking water supply piping every **14** days. The value „0“ switches the flushing off.
Act on the port switch-over valve.

Flushing the drinking water supply pipes for **30** seconds.
Act on the port switch-over valve.

Cleaning the rainwater filter every **14** days.
The value 0 switches the cleaning process off.

Cleaning the rainwater filter for **5** seconds

Cleaning the rainwater filter when the fill level has increased by 2% after rainfall. If the fill level continues to increase, the rinsing will be repeated every 3 hours. *The value 0 switches the cleaning process off.*

Permit the cleaning of the rainwater filter with mains drinking water (standard: **“NO”**)

Picture 10: Sub-menu “Switching points”

Press the „OK“ button to alter the respective switching points The value to be altered will begin to blink. The value may then be adjusted by using the▲and the▼buttons. Press the “OK” button again when the displayed value should be accepted.

In the depiction 10 the standard factory settings have been displayed.

The following is an introduction to the general device settings:

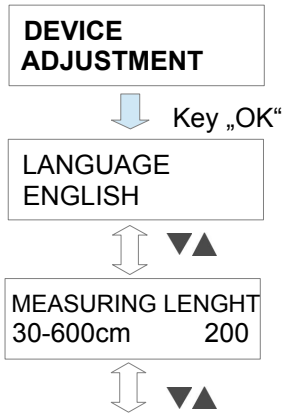

Main menu level

[20] in Figure 2
(A 6m Sensor may be ordered.)

Picture 11: Sub-menu “General device description”

The last part of the operation level covers the manual functions:

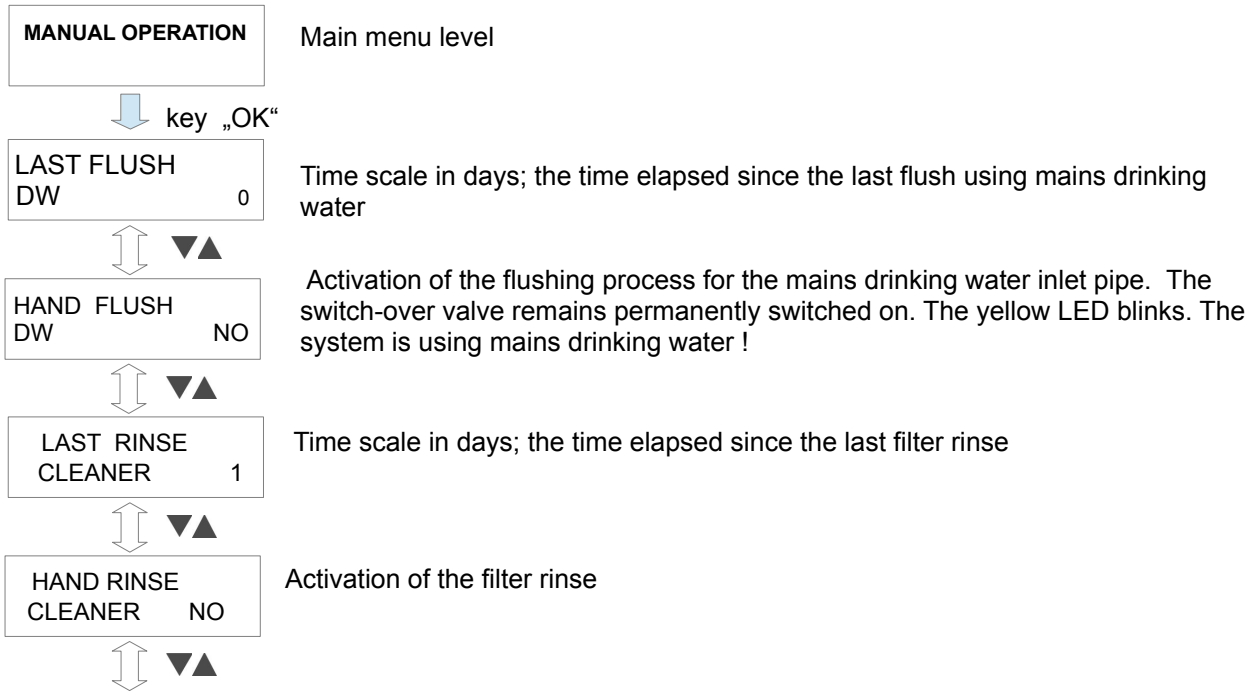

Picture 12: Sub-menu “Manual functions”

7. Error messages and fault correction

The operation of the system control is to be checked at regular intervals (at the latest every 4 weeks).

The read out reports always represent only probabilities; e.g. no clear localization by the device is possible for overlaying faults.

Please also take note that the system control device cannot identify any malfunction of the house water system. (No malfunction signal is supplied by the house water system to the system control device).

If faults are recognized by the sensors the system control cannot continue to work **independently.** The particular faults are shown on the plain text in the display:

ERROR SENSOR	The reason for this error is that the white sensor cable has been damaged.
ERROR DL SHORT CIRCUIT	Error possibilities: The data cable of the measurement pick-up is not connected to the data cable terminal **[14]** but has been connected to the sensor terminal **[15/16]** - - Cinch plug or the cinch connector has a short circuit - Wires of the data cable have been damaged
ERROR SENSOR CONTROL	The measurement sensor delivers no signal and must be replaced.
ERROR SENSOR SYSTEM	For further diagnosis, remove the stainless steel weight **[22]** out of the water. If the error indication has now stopped, then the sensor it self was the cause of the fault. If the error indication should continue, this implies that the measurement pick-up is defect.
ERROR NO SIGNAL	The communication between the system control to the measurement pick-up is interrupted.
ERROR MEMORY	First try re-setting the system control to the factory default settings . If the error message continues to be displayed then it is necessary to contact your service partner.

Note: *After re-setting to the factory default settings all the newly programmed setting values will have been overwritten and must be re-programmed!*

Picture 13: Error messages

If the device shows no function at all then check whether the main electrical supply provides current and also check the house fuses.

Before opening the equipment pull the plug out from the mains socket!

If the electrical outlet is under current, then unplug the mains plug from the system control. Without connection to current open the lower cover of the system control (see Figure 1) and check the equipments mains fuse.

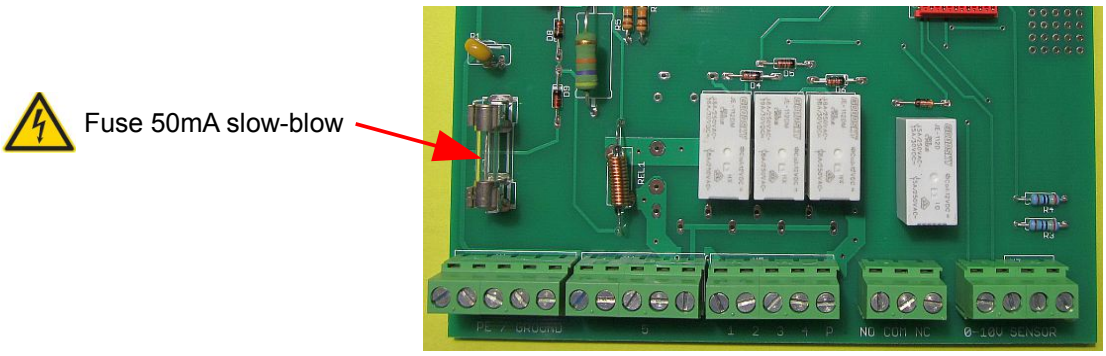

Picture 14: Location of the fuse

If your efforts are unsuccessful, please consult the manufacturer by E-Mail.

8. Upgrade options

The SILENTIO control device can also be equipped with a number of additional special functions.

1. Optional pressure sensor

Using a pressure sensor, alternative mediums or depths may be adapted to the use of the device. The sensor must be matched the required specifications of the device.

2. Optional drain pump

If the fill level of the tank reaches a specified value, then a valve or a pump can be activated. This is to prevent the fill level of the tank from exceeding a specified maximum level.

3. Optional refill

If the fill level in the main tank sinks below a specified level, then a second tank is employed to back up and refill the main tank. The pump used in this process must also be equipped with a mechanism to prevent it from running dry.

If this system is required, then the device must be sent to the manufacturer. There follows an additional calculation.

9. Analogue outlet

Your device has been fitted with an additional analogue port. This port shows the percent values from the system control (0% – 100%) by a voltage range from 0V to 10V. The following connection values apply:

Minimal apparent ohmic resistance	: 20KΩ
Short circuit protection	: Yes
Short circuit current	: Approximately 15mA
Cable length	: maximum 200m (shielded)

The system control is only capable of displaying whole percent values (no fractions). These are shown on the analogue signal display. A maximum of one digit behind the point is to be considered for the evaluation of the pro-cent value.

Before opening the equipment pull the plug out from the mains socket!

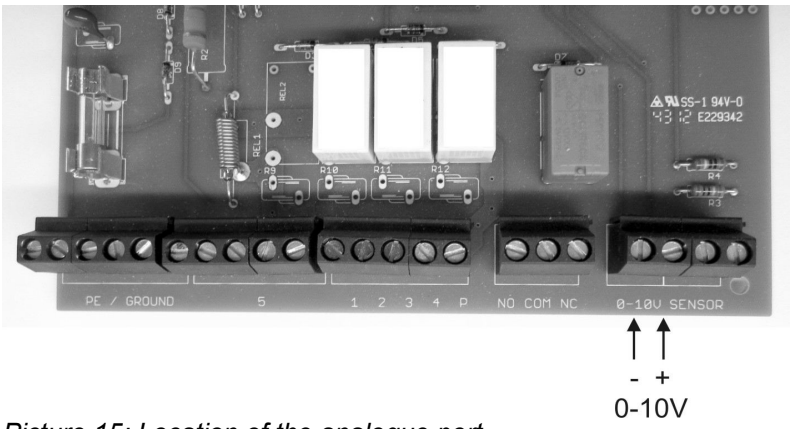

Picture 15: Location of the analogue port

10. Alarm indicator contact

As an additional function, your unit is equipted with a potential-free alarm indicator contact. This contact is designed as a changeover contact element. A maximum of 230V AC is approved when a current of 1A is switched. The activation of this contact occurs as soon as

one of the malfunctions listed under Point 6 appears. The picture on the following page shows the location of the connections. These become available as soon as the lower cover of the system control unit is opened (see **[7]** in diagram 1).

Before opening this cover, it is important to disconnect the device from the mains electricity supply!

Explanation of terms:

- COM is the common port
- NC is coupled to the COM port when there is no current.
- NO is connected to the COM port when there is a malfunction

Before opening the equipment pull the plug out from the mains socket!

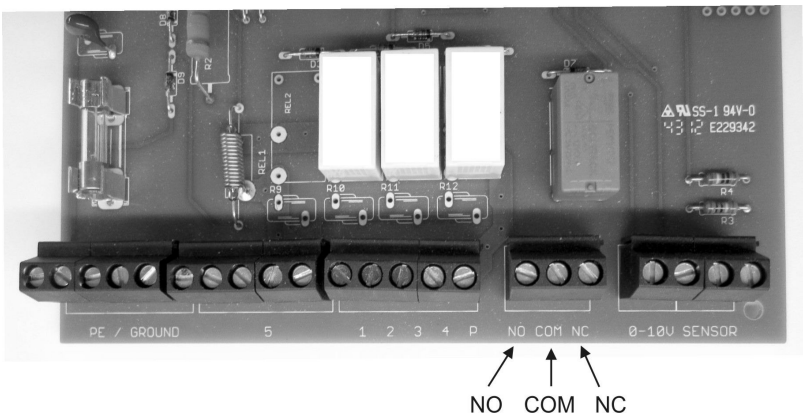

Picture 16: Location of the fault indicator

The M 12/M16 opening on the underside of the system control device must be opened and the cable drawn through. Place the supplied grommet into the opening and pass the cable through into the system control.

11. General installation and assembly regulations

It is necessary to these instructions when installing a rain water usage equipment:

EN 806 : - Drinking water installation
- Planning and implementation
- Calculation of the pipe diameters
- Using the equipment

EN 1717 : - free outlet between drinking and rainwater
- Notification sign to inform that a rainwater usage system is installed in the locality
- Notification signs marking the rainwater outlets
- Notification signs marking the rainwater installations network
- Backflow prevention (e.g. a non-return/check valve)
- Frost free installation
- Reservoir/tank with air bleeding/ventilation

EN 1256 : - No diameter reduction in the drainage system
- Technical regulations in relation to groundwater drainage

EN 752 : - Drainage systems outside of buildings according to the regulations of the local services authorities

When required: Obligatory registration of the system and other mandatory stipulations

12. Disposal of the equipment

Old equipment may not be disposed of in the house refuse. It must be brought to the recognised professional recycling depot.

Please help – ensure your old electronics come to a separate recycling.

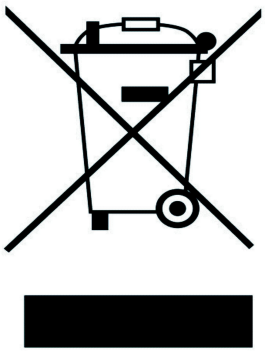

13. Manufacturer

Should you have any problems with the equipment, please contact:

VEINLAND GmbH

Niederlassung Prenzlau
Franz Wienholz Str. 40
D- 17291 Prenzlau

Tel. : +49 3984- 80 87 17
Fax : +49 3984- 80 69 61
Internet : www.veinland.net
Mail : info@AS-Prenzlau.de

We prefer to receive an E-Mail, if you must contact us then be sure to enter the serial number of your controller that begins with "AS".

The serial number is found on the name/type label.

Attachment A – Symbols used:

Attention! Pull out the mains plug from the socket before opening the device.

Warning of dangerous electrical voltage

Attention! An error has occurred.

Mains drinking water operation

▼ Page down

▲ Page up

Protection classification I

Only for use in a dry areas.

Space for your notes:

Revision history:

Revision	Date	Description	Author
Silentio 3.4	07.02.2018	Recorded as a manual	SU
Silentio 3.5	19.07.2019	Formatting A5	SU
Silentio 3.6	04.02.2020	Formatting A4	SU

Purchase date : .....

Device serial number / Type : AS SI .....

Design and specifications are subject to change without notice.

Dated: February 2020

man_Silentio_3-6_eng.odt